Xenon Kelly_M Diamond 5x

This high resolution 5.0x lens with beam splitter for axial illumination is optimized for 16k / 5 µm (82 mm) line scan cameras. It provides high performance at 72 LP/mm and detects smallest targets to solve the most challenging applications. The V-Mount interface makes it easy to install mounts and rotate the lens into the highest performance.

Key features

- Optimized for 82 mm line scan sensors
- With beam splitter for axial in-line illumination
- 400 nm to 1000 nm AR-coating

Applications

- FPD inspection
- PCB inspection
- High resolution defect detection
- Quality assurance systems

Technical specifications

Type [standard]	-0003
ID [standard]	1096957
Interface	V90-Mount
Focal length [mm]	92
F/# range	F/1.4 ... F/11
Numerical aperture	0.225
Max. sensor size [mm]	82
Max. angle of view [°]	7
Rec. magnification range	-5 (-5.2 ... -4.8)
Rec. working distance range [mm]	31 ... 33
Max. mechanical focus travel [mm]	-
Filter thread [mm]	-
Storage temperature [°C]	0 … +50
Net. weight [standard] [g]	2870
Additional info	Max. chief ray angle in object space = 3.4°
f'eff [mm]	92.42
SF [mm]	-14.51
S'F' [mm]	-28.18
HH' [mm]	3.64
ß'P	0.79
SEP [mm]	103.12
S'AP [mm]	-100.76
Σd [mm]	202.14

Xenon Kelly_M Diamond 5x

MTF charts

Spectrum name	-									
Wavelengths [nm]	-	-	-	-	-	-	-	-	-	-
Rel. weights [%]	-	-	-	-	-	-	-	-	-	-

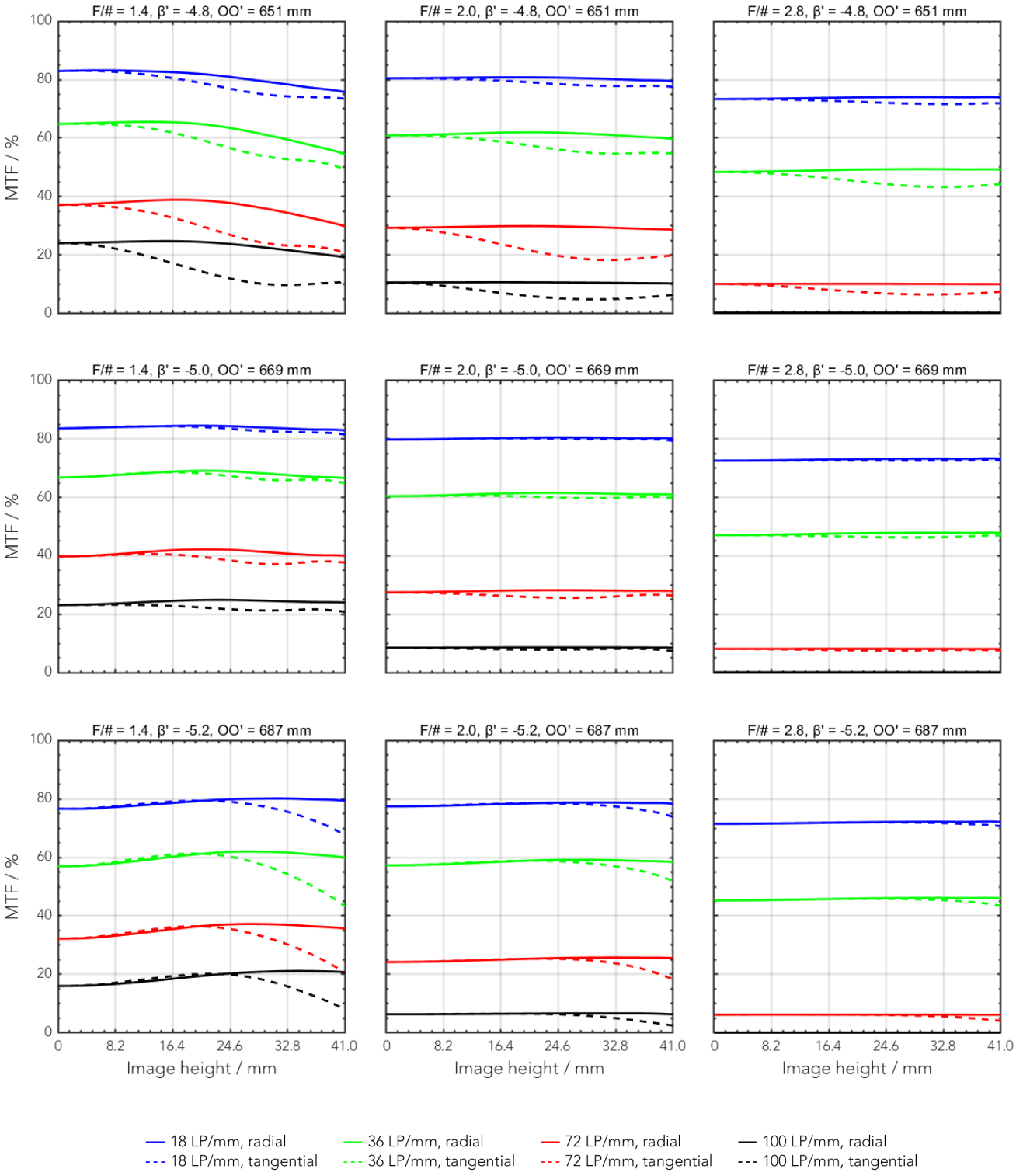

Rel. illumination vs. image height

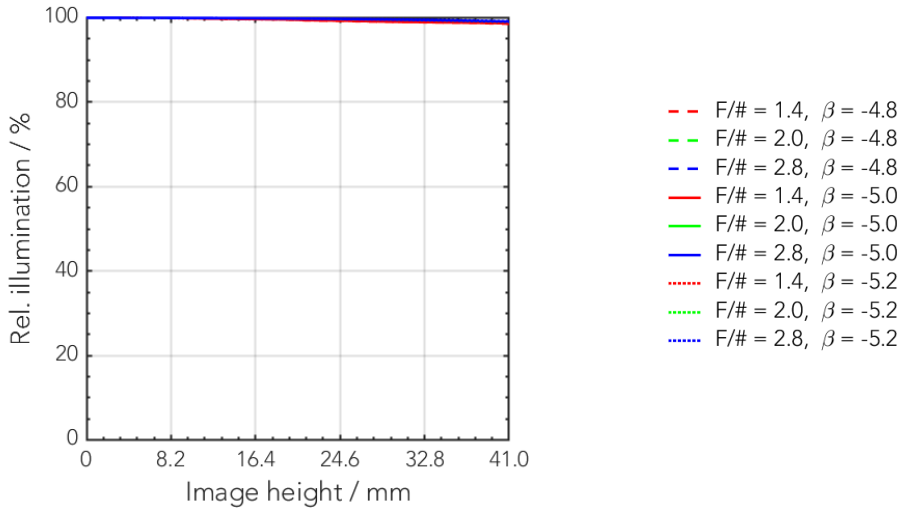

Distortion vs. image height

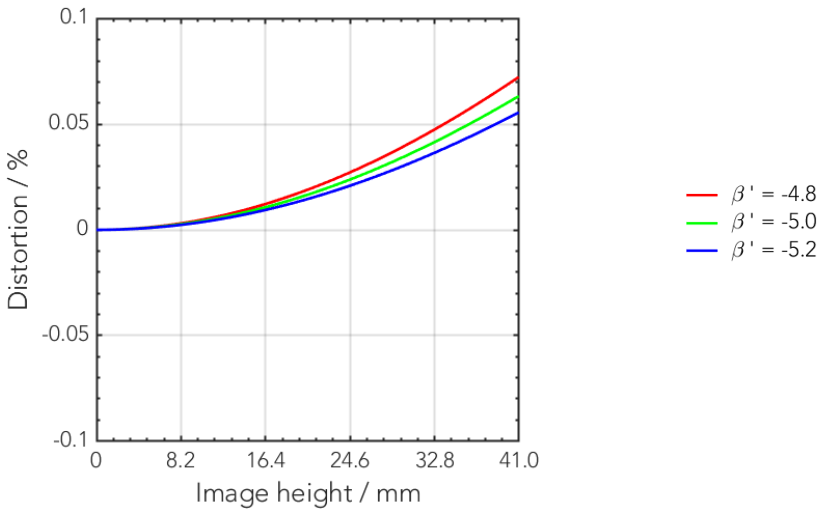

Transmittance vs. wavelength

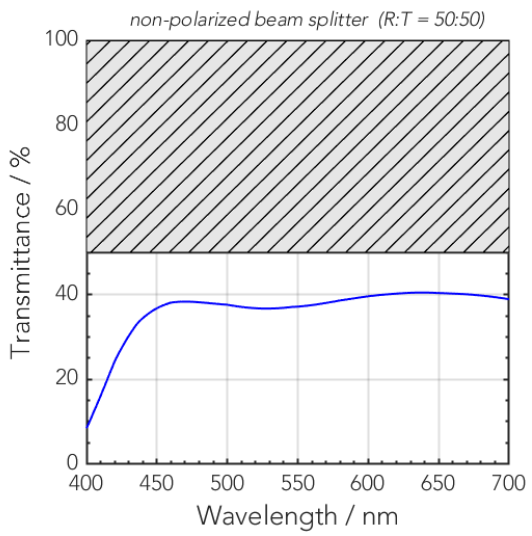

Technical drawings

* WD and s'A in air at beta' -5.0

view without transport protection

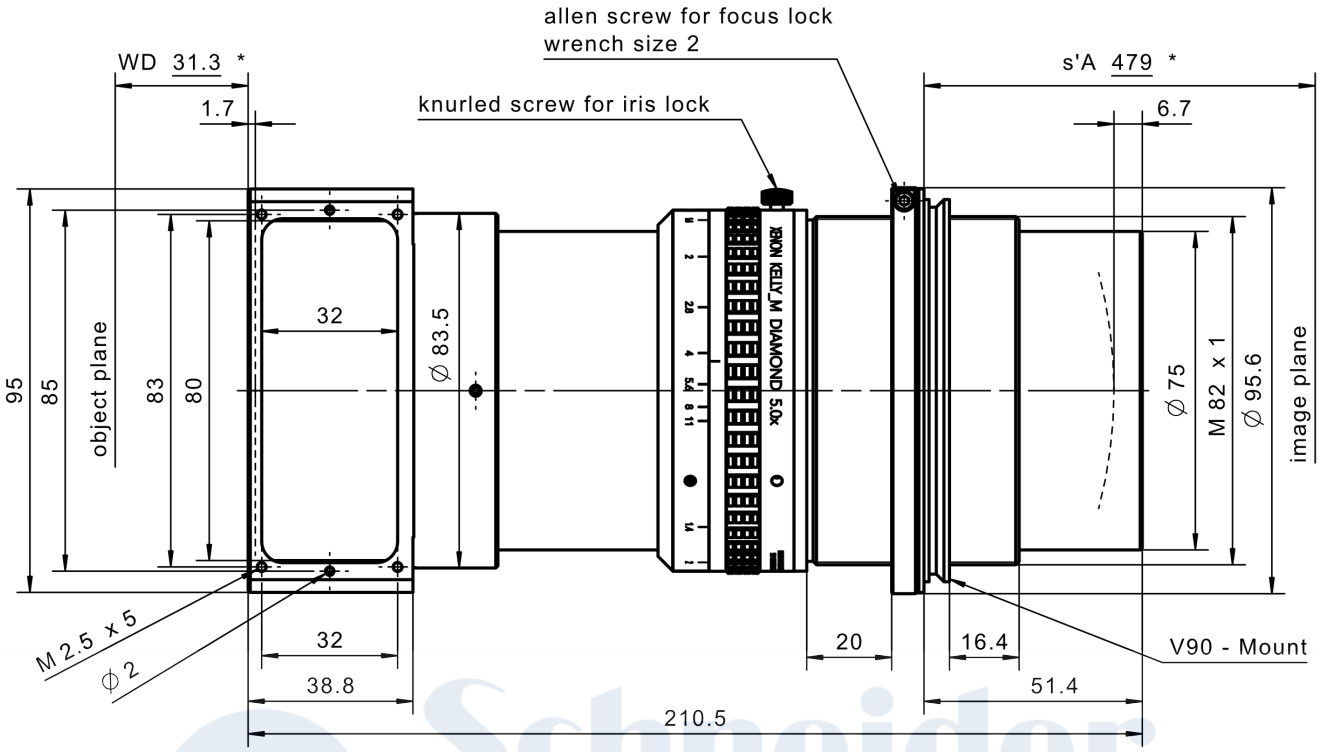

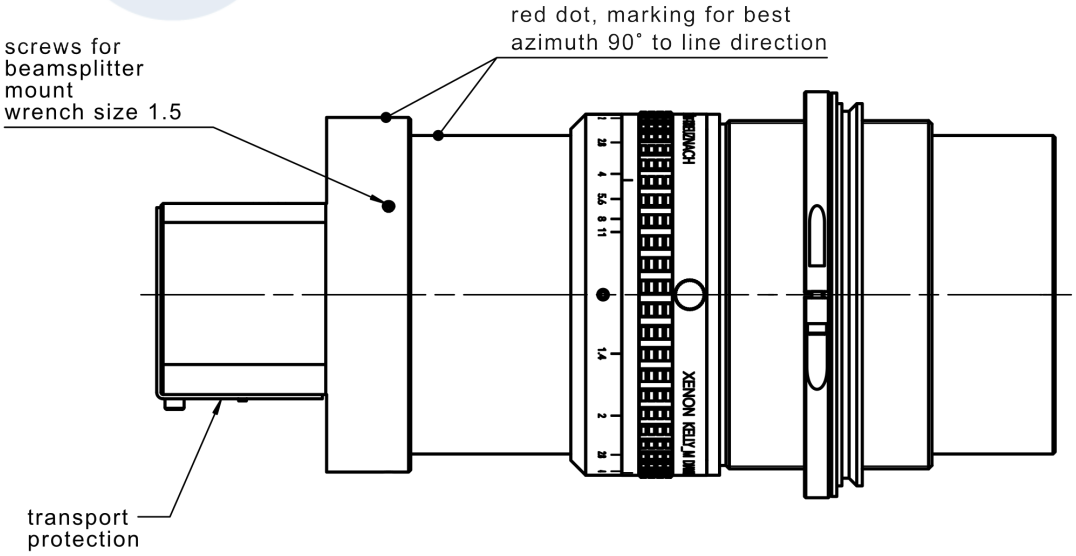

Annotation	
Focal length	Nominal focal length
F/# range	Image space F-number range for infinity focus position
Numerical aperture	Maximum real numerical aperture (depending on recommended magnification range either for infinity or respective fixed magnification)
Max. sensor size	Image circle diameter
Max. angle of view	Angle of view associated with maximum sensor size (depending on recommended magnification range either for infinity or respective fixed magnification)
Rec. magnification range	Magnification range as recommended by Schneider-Kreuznach
Rec. working distance range	Working distance, i.e. distance between object and first mechanical element, associated with recommended magnification range
Max. mechanical focus travel	Maximum possible movement of the lens from infinity position (depending on recommended magnification range either for infinity or respective fixed magnification)
Net weight	weight of unpacked lens without lens cap
f'eff	Effective focal length
SF	Distance between vertex of first lens surface and object space focal point
S'F'	Distance between vertex of last lens surface and image space focal point (back focal distance at infinity)
HH'	Distance between principal planes
ß'P	Pupil magnification (= exit pupil diameter / entrance pupil diameter)
SEP	Distance between vertex of first lens surface and entrance pupil
S'AP	Distance between vertex of last lens surface and exit pupil
Σ d	Distance between vertices of first and last lens surface
s'A	Flange focal distance (in air) for infinite object distance (depending on recommended magnification range either for infinity or respective fixed magnification)
ß'	Magnification (= image size / object size), negative value because image is inverted
OO'	Distance between object and image

Unless otherwise stated all dimensions in this data sheet are in mm.

Headquarters Europe

Jos. Schneider Optische Werke GmbH
Ringstraße 132
55543 Bad Kreuznach
✆ +49 671 601 205
✉ cs@schneiderkreuznach.com
www.schneiderkreuznach.com

Offices Worldwide

America
✆ +1 800 645 7239 (East Coast)
✆ +1 800 228 1254 (West Coast)
✉ info@schneideroptics.com

Asia
✆ +86 755 8832 1170
✉ info@schneider-asiapacific.com